MONITORS BATTERY CHARGE, LOAD, IN, OUT & SOC

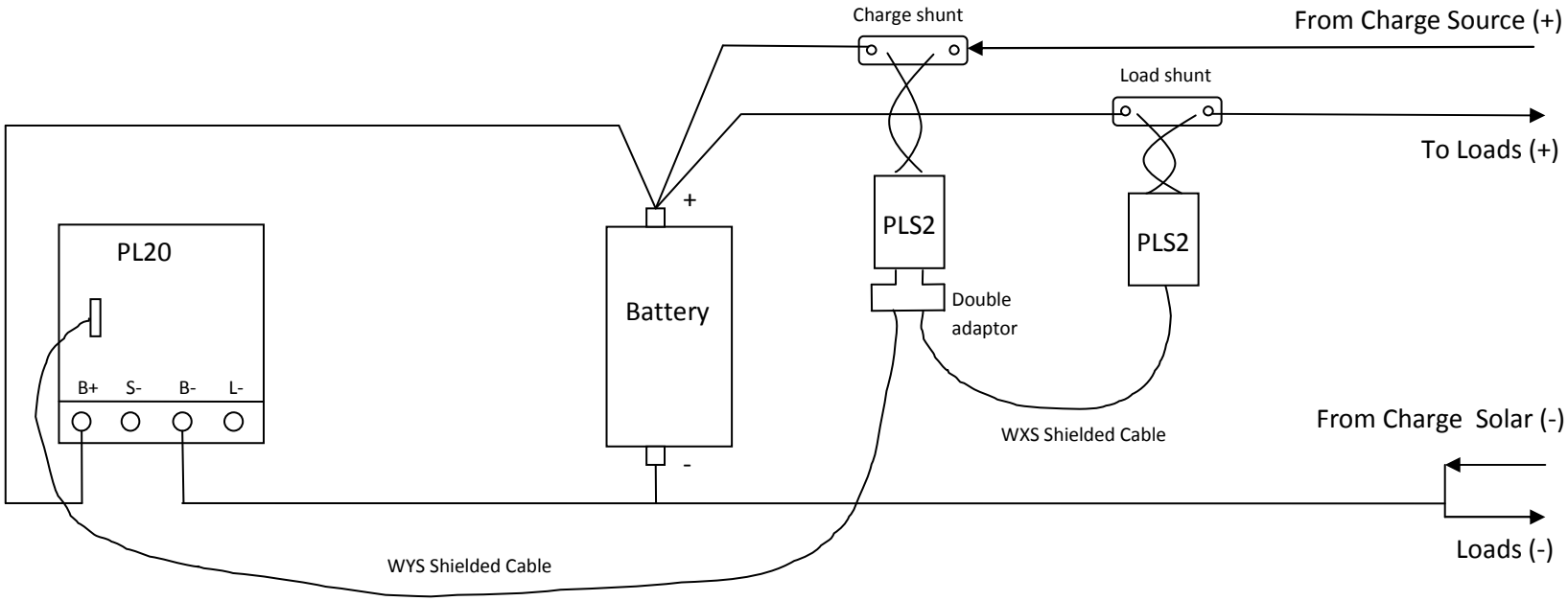

NOTES:

- PL20 used to monitor charge and loads only and performs no charging control functions
- Add fuses where required
- Set BCAP for correct state of charge (SOC)